FISHER & PAYKEL

DRYER

DH9060D5 FP AA

PRODUCT CODE: 93325-A

PARTS MANUAL

AA

INTRODUCTION

BRAND	VOLTAGE	MODEL	PRODUCT CODE
Fisher & Paykel	220/240 VAC 50Hz	DH9060D5 FP AA	93325-A

MODELS

The models covered by this manual are listed on the front cover.
The information detailed in this manual is subject to change without notice. The latest version is indicated by the reprint date and replaces any earlier editions.

KIT PARTS

Where a part number is shown against the descriptions for kit components, they are also available as separate items. In addition, some parts may be supplied with these kits that are not available as separate items, and are therefore either not listed, or a part number is not shown against the part description in this manual.

PARTS LIST KEY

NI	As a part reference, indicates the part is not illustrated on the diagram.
NOT USED	As a part number, indicates the diagram part reference is not used in this manual.
NS	As a part number, indicates the part is not servicable.

NZ

Tel: 0800 287 746

https://www.fisherpaykel.co.nz

AU

Tel: 1300 650 585

https://www.fisherpaykel.com.au

CONTENTS

INTRODUCTION 1

CONTROL PANEL COMPONENTS 3
DOOR COMPONENTS 5
CABINET COMPONENTS 7
DRUM & HOSES 11
BASE COMPONENTS 13
REAR CABINET COMPONENTS 15

CONTROL PANEL COMPONENTS

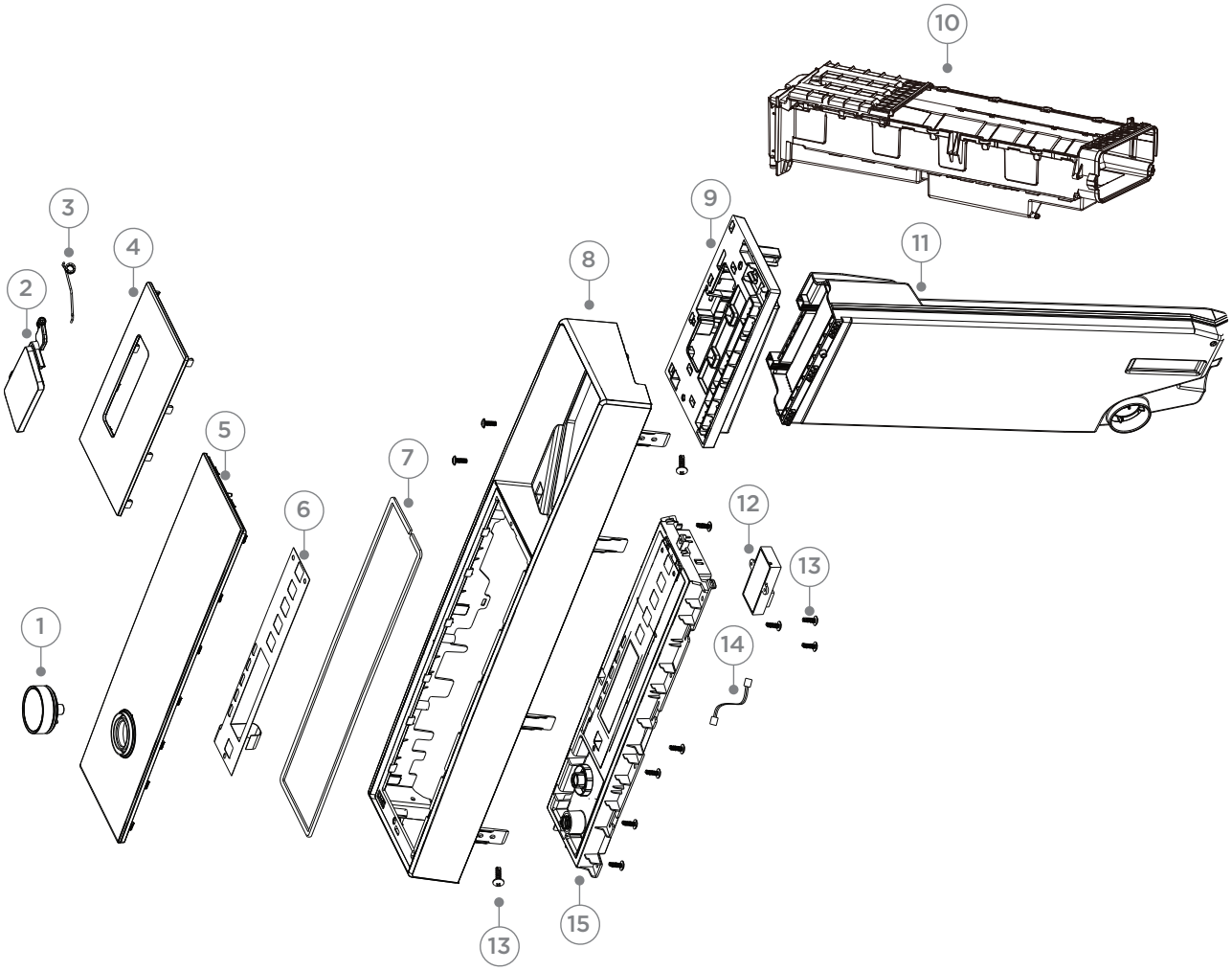

DWG 007317

CONTROL PANEL COMPONENTS

REFERENCE	PART NUMBER	PART DESCRIPTION
1	H0020814364	DIAL ASSY WHITE
2	H0020209081AJ	UI BOARD
3	H0020600187C	SPRING TORSION
4	H0020210907GB	PANEL TANK 9060
5	H0180201557	PANEL DECORATIVE BOARD WHITE
6	H0021800587	PANEL TOUCH
7	H0020301113C	STRIP SEALING
8	H0180201267AA	PANEL CONTROL
9	H0180201275AA	CONSOLE TANK
10	H0180201101	COVER
11	H0180201119AA	TANK WATER
12	H0021800217AC	MODULE WIFI
13	H00330810033	SCREW CS 17 ST4 X 14
14	H0020400809C	WIRING HARNESS
15	H0021800586HG	BOARD DISPLAY

DOOR COMPONENTS

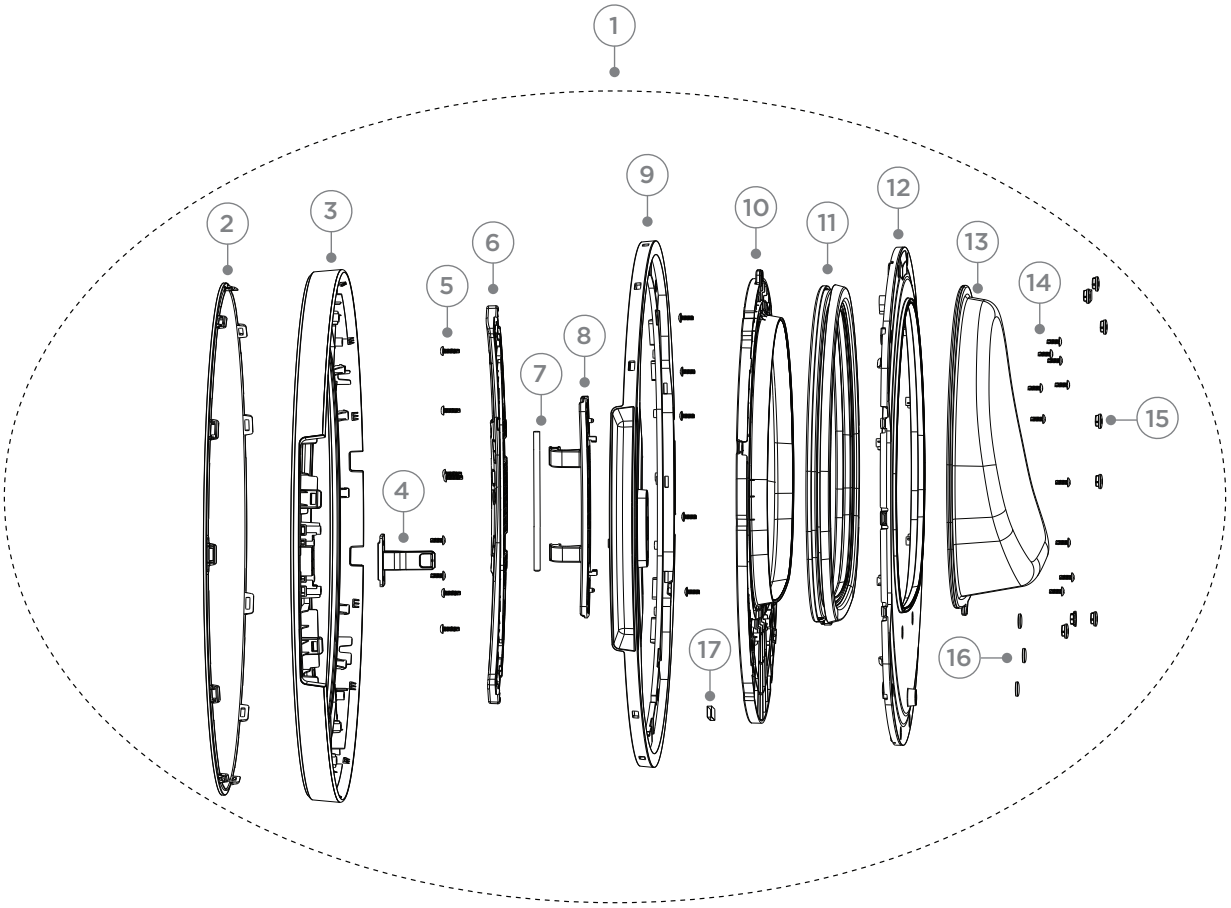

DWG 007240

DOOR COMPONENTS

REFERENCE	PART NUMBER	PART DESCRIPTION
1	**H0180802896AA**	DOOR ASSY
	Includes H0181400016E	COVER DOOR
	Includes H0180201271AC	FRAME WINDOW
	Includes H0180100470	DOOR HOOK
	Includes H00330810009	SCREW SELF TAPPING
	Includes H0180201274	SEAT HINGE
	Includes H0020104708	AXIS HINGE
	Includes H0020104698	HINGE DOOR FRONT
	Includes H0180201268AA	FRAME INNER WINDOW
	Includes H0180201260AA	FRAME MIDDLE DOOR
	Includes H0180300193	SEAL WINDOW
	Includes H0180201272AA	FRAME REVERSING WINDOW
	Includes H0181400015	LID GLASS
	Includes H00330810010	SCREW
	Includes H0020301215C	COVER SCREW
	Includes H0030511602H	COVER ROUND
	Includes H00330067003A	MAGNET LID SWITCH
2	**H0181400016E**	COVER DOOR
3	**H0180201271AC**	FRAME WINDOW
4	**H0180100470**	DOOR HOOK
5	**H00330810009**	SCREW SELF TAPPING
6	**H0180201274**	SEAT HINGE
7	**H0020104708**	AXIS HINGE
8	**H0020104698**	HINGE DOOR FRONT
9	**H0180201268AA**	FRAME INNER WINDOW
10	**H0180201260AA**	FRAME MIDDLE DOOR
11	**H0180300193**	SEAL WINDOW
12	**H0180201272AA**	FRAME REVERSING WINDOW
13	**H0181400015**	LID GLASS
14	**H00330810010**	SCREW
15	**H0020301215C**	COVER SCREW
16	**H0030511602H**	COVER ROUND
17	**H00330067003A**	MAGNET LID SWITCH

CABINET COMPONENTS

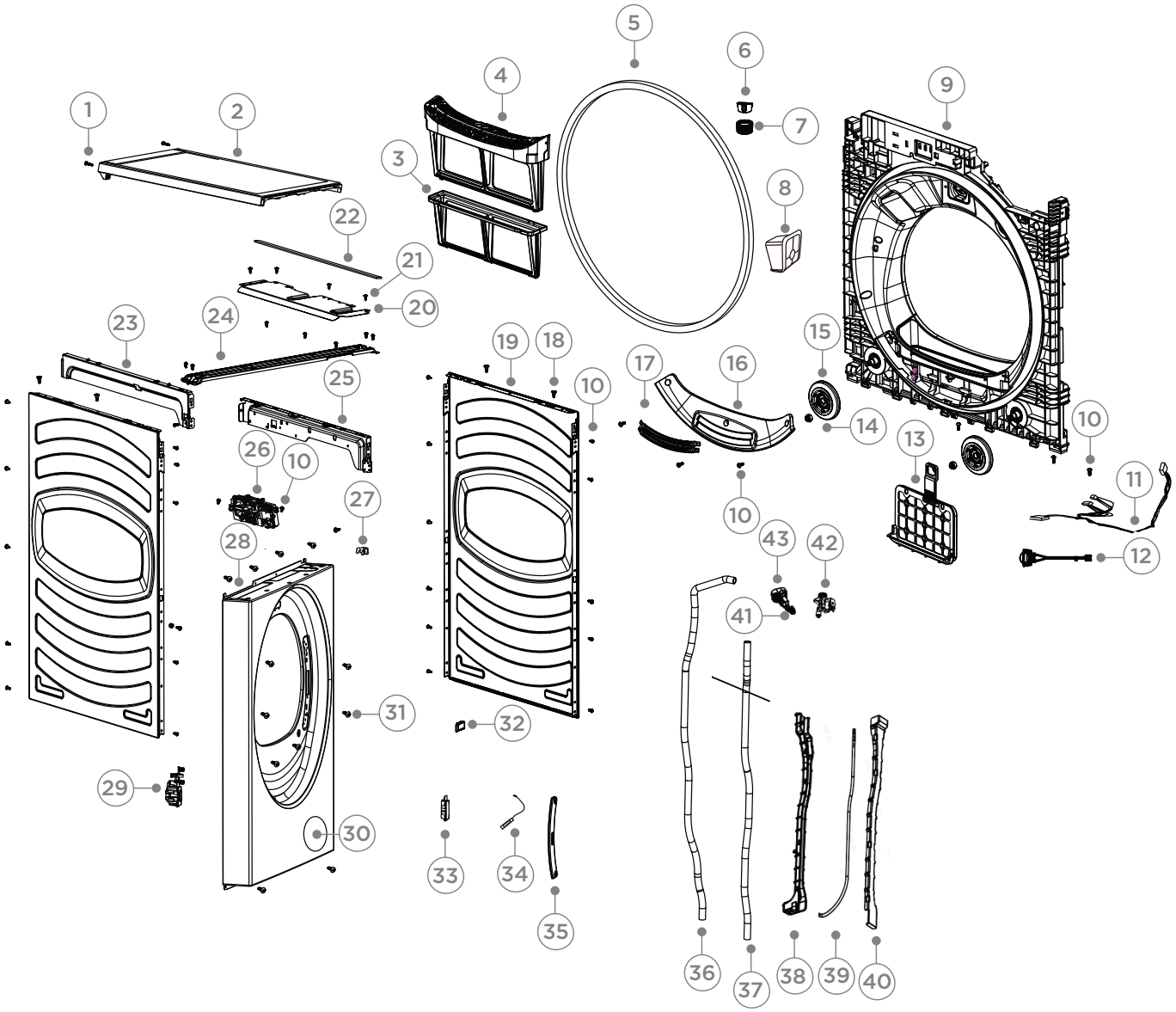

DWG 007249

CABINET COMPONENTS

REFERENCE	PART NUMBER	PART DESCRIPTION
1	H0020600179	BOLT
2	H0180801917AD	COVER TOP
3	H0180200835	FILTER INNER
4	H0180200834	FILTER OUTER
5	H0030300025D	SEAL FELT
6	H0180200837	SEAL CAP
7	H0180200836	SEALED BOX
8	H0180200921	MODULE
9	H0180200831C	SUPPORTER DRUM
10	H00330802005A	SCREW
11	H0180400017	WIRING HARNESS
12	H0184000042B	LAMP LED
13	H0180801144BA	FILTER
14	H00215000000001A	NUT
15	H0180800201D	BEARING FRONT DRUM GUIDE
16	H0180200833	SUPPORT FILTER
17	H0180100672	SENSOR HUMIDITY
18	H0020600491	SCREW
19	H0180100659AD	PANEL SIDE
20	H0180100679	BOARD FIREPROOF
21	H0020600179	BOLT
22	H00212500375104	GASKET
23	H0180100660	GRIDER LH
24	H0180100662	BEAM REINFORCING
25	H0180100661	GRIDER RH
26	H0181800085C	BOARD POWER CONTROL
27	H0020400432	SUPPORT CONNECTOR
28	H0180802494CA	PANEL FRONT WHITE
29	H0180801230	LOCK DOOR
30	H0180802737	VENT
31	H0000600021	SCREW DOOR
32	H0180200668	COVER REED SWITCH WHITE
33	H0180200864	COVER REED SWITCH
34	H0034000405E	REED SWITCH
35	H0180201276AA	COVER HINGE WHITE

CABINET COMPONENTS

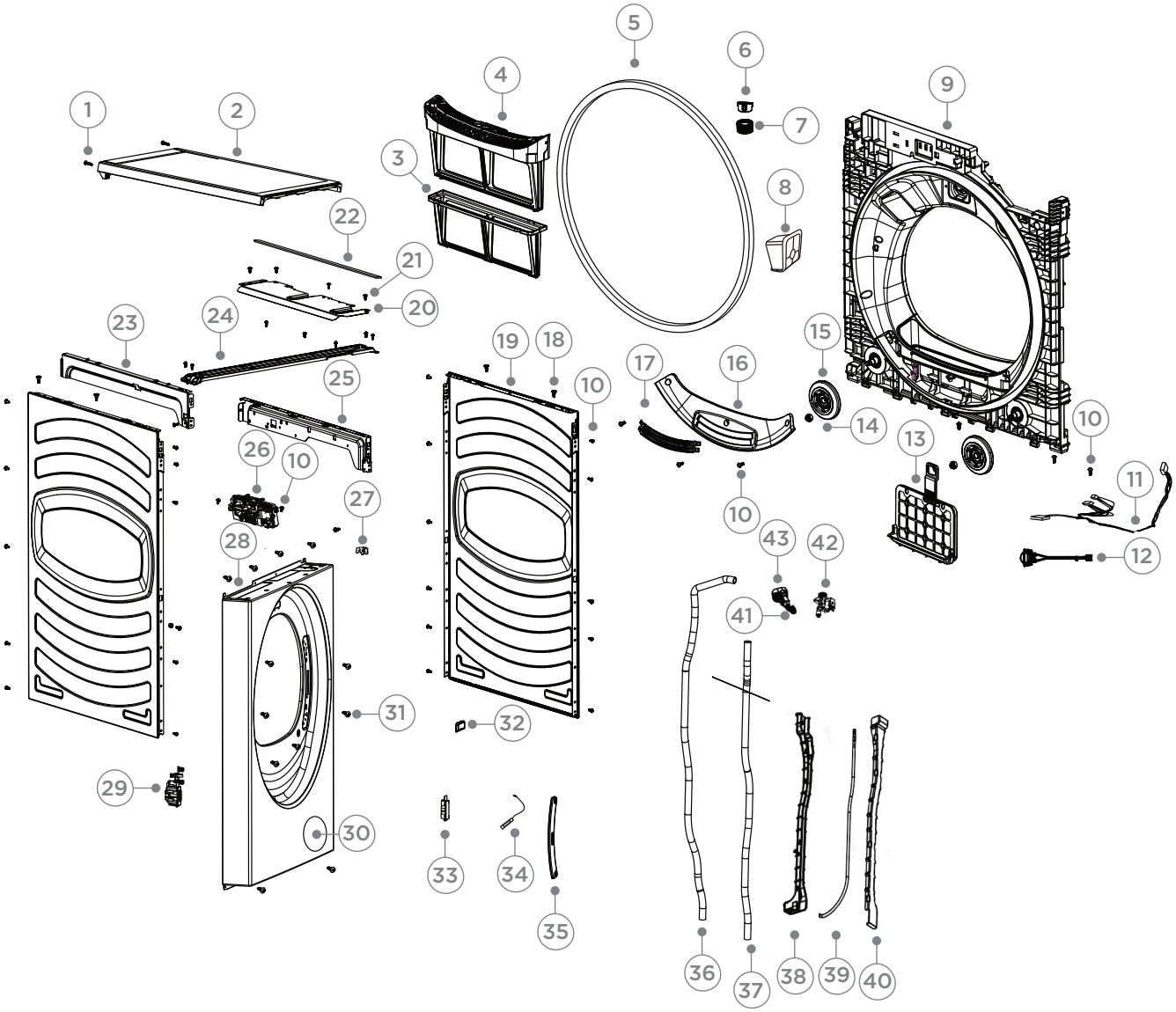

DWG 007249

CABINET COMPONENTS

REFERENCE	PART NUMBER	PART DESCRIPTION
36	**H0180300164**	HOSE DRAIN
37	**H0180300163**	CONDENSOR
38	**H0180201277**	SPOUT WATER
39	**H0180200541B**	PIPE INLET WATER
40	**H0180201278**	COVER PIPE TANK
41	**H0180100402**	SPRAY HEAD
42	**H0184000048**	VALVE INLET
43	**H0180200539**	CONNECTOR

DRUM & HOSES

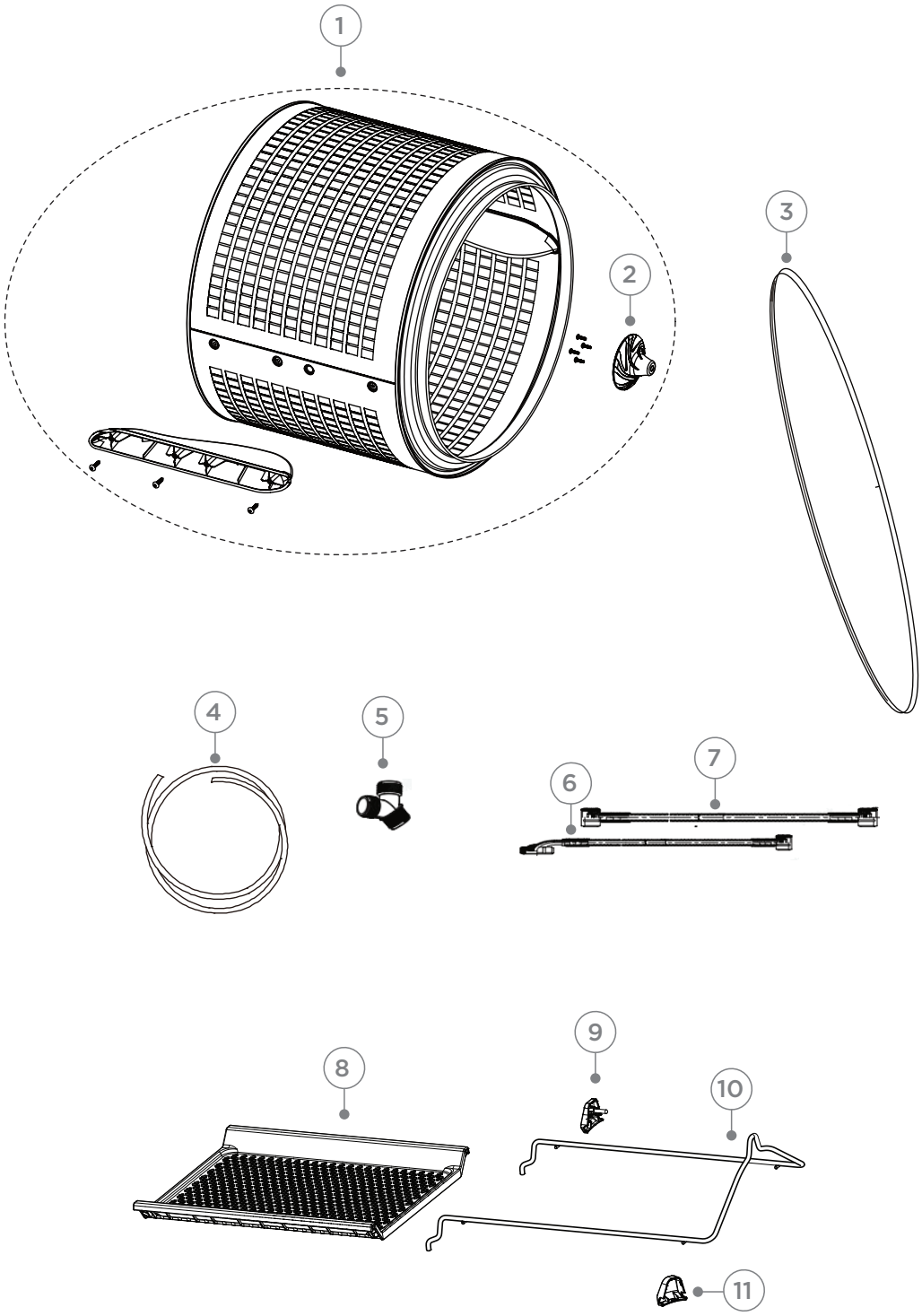

DWG 007262

DRUM & HOSES

REFERENCE	PART NUMBER	PART DESCRIPTION
1	**H0180802066B**	DRUM ASSEMBLY
	Includes H0180200846	CAP ROUND
2	**H0180200846**	CAP ROUND
3	**H0180300006C**	BELT
4	**H0180300164**	HOSE DRAIN
5	**H0180200714**	JOINT Y
6	**H0020813072**	HOSE INLET .65M
7	**H0020813069**	HOSE INLET 1M
8	**H0180100401**	WIRE FRAME SHOE RACK
9	**H0180200619**	AXLE SHOE RACK
10	**H0180200543**	BRACKET DRYER RACK
11	**H0180200618**	COVER PROTECTIVE DRYER RACK

BASE COMPONENTS

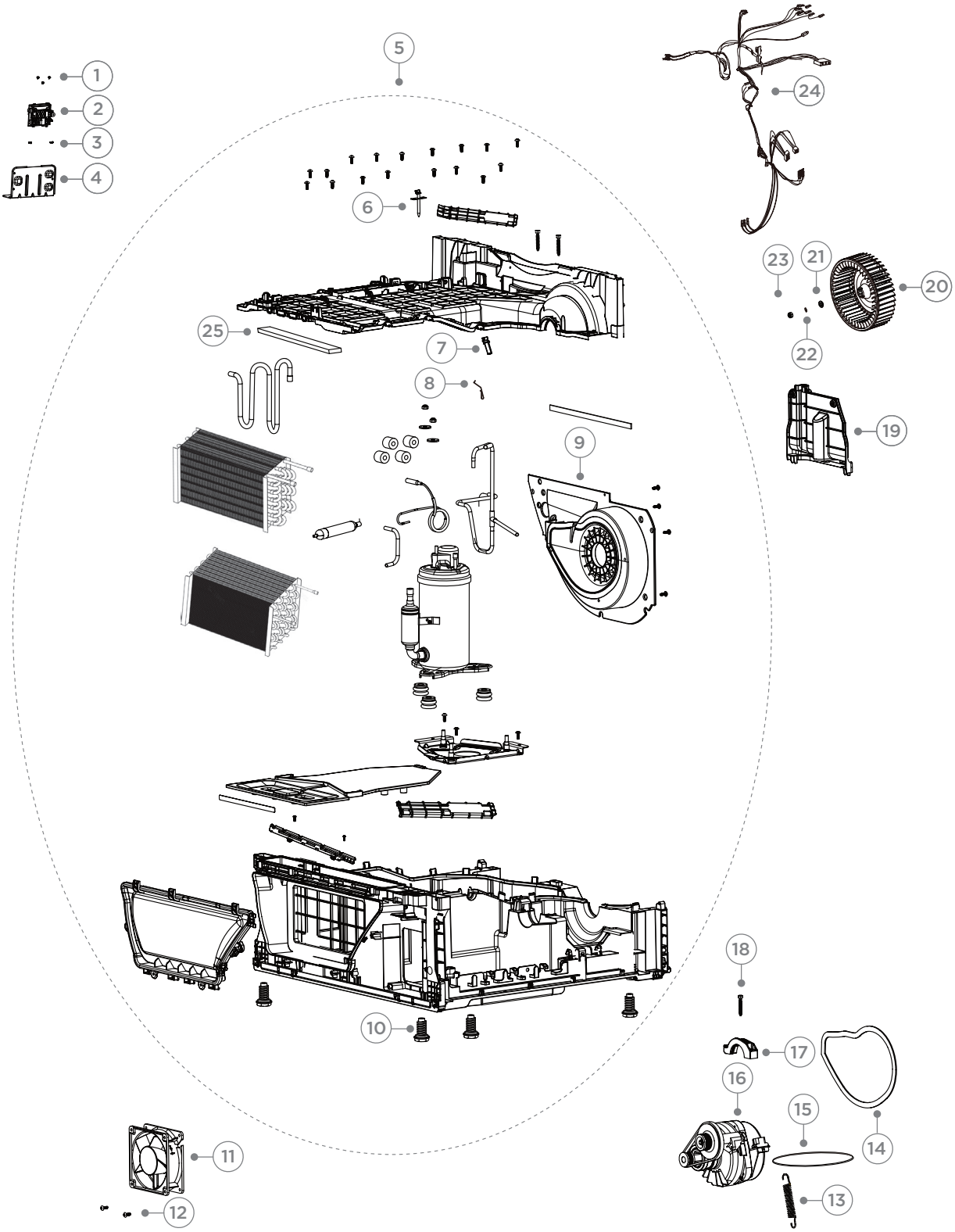

DWG 007247

BASE COMPONENTS

REFERENCE	PART NUMBER	PART DESCRIPTION
1	**H0020600179**	BOLT
2	**H0181800103**	BOARD DRIVER
3	**H00330802005A**	SCREW
4	**H0180100679**	BOARD FIREPROOF
5	**H0180802878A**	BASE ASSEMBLY
	Includes H0184000005	THERMISTOR NTC
	Includes H0024000259A	THERMISTOR NTC
	Includes H001A5512004	THERMISTOR CLIP RETAINING
	Includes H0180200830AA	FAN ASSY BASE
	Includes H00214900014600A	FOOT CREAM
6	**H0184000005**	THERMISTOR NTC
7	**H0024000259A**	THERMISTOR NTC
8	**H001A5512004**	THERMISTOR CLIP RETAINING
9	**H0180200830AA**	FAN ASSY BASE
10	**H00214900014600A**	FOOT CREAM
11	**H0184000012C**	MOTOR FAN
12	**H0020600179**	BOLT
13	**H0180100315**	MOTOR TENSION SPRING
14	**H0030300337**	GASKET
15	**H0180300058**	BELT CHLOROPRENE RUBBER
16	**H0184000088**	MOTOR
17	**H0180200108**	MOTOR RETAINING CLIP FRONT
18	**H00330802504A**	TAPPING SCREW
19	**H0180200848**	COVER PUMP DRAIN
20	**H0180200850**	FAN
21	**H0030600168**	WASHER METAL
22	**H003-0120600393**	WASHER
23	**H00215000000001A**	NUT
24	**H0180400068H**	HARNESS
25	**H0180300116**	FILTER SPONGE

REAR CABINET COMPONENTS

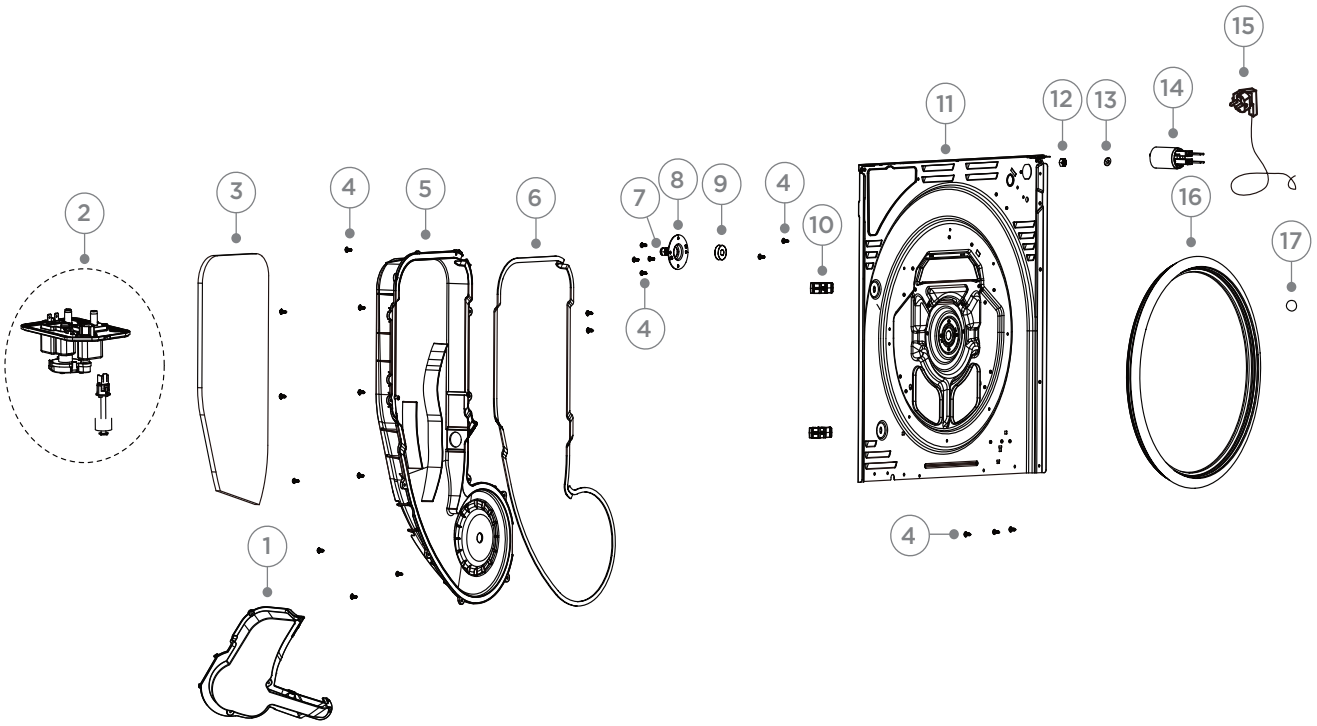

DWG 007248

REAR CABINET COMPONENTS

REFERENCE	PART NUMBER	PART DESCRIPTION
1	H0180200993	PLATE BACK
2	H0184000073	DRAIN PUMP
3	H0180300156	CUSHION ISOLATED
4	H00330802005A	SCREW
5	H0180200839B	COVER REAR AIR CHANNEL
6	H0180300013	SEAL FAN COVER
7	H00215000000001A	NUT
8	H00213500013400	BEARING SUPPORT
9	H0020100313B	BEARING DRUM
10	H0180200020	CLIP CONDENSATE HOSE
11	H0180100669G	PANEL BACK
12	H00215000000001A	NUT
13	H00215000000002A	WASHER
14	H0024000247KD	FILTER
15	H0180300196	CUSHION ISOLATED
16	H0020400196FE	POWER CORD
17	H0024000733	RING MAGNET

FISHERPAYKEL.COM

© Fisher & Paykel Appliances 2025. All rights reserved.

The models shown in this guide may not be available in all markets and are subject to change at any time.

The product specifications in this guide apply to the specific products and models described at the date of issue. Under our policy of continuous product improvement, these specifications may change at any time.

For current details about model and specification availability in your country, please go to our website or contact your local Fisher & Paykel dealer.

PRODUCT CODE: 93325-A 03.26